BERNER
AIR CURTAINS

Architectural Contour Air Curtain Series
#AC08 & AC10

Installation & Maintenance Instructions

TABLE OF CONTENTS

I. UNCRATING 2
II. GENERAL MOUNTING INSTRUCTIONS 4
III. WALL MOUNTING 4
IV. SUSPENDED MOUNTING 5
V. ELECTRICAL CONNECTIONS 5
VI. FIELD CONNECTIONS 6
VII. OPERATING INSTRUCTIONS (Berner AIR®, Intelliswitch™) 7
INTELLISWITCH™ QUICK START OPERATION 12
VIII. MAINTENANCE AND CLEANING 9
IX. SERVICE 10
X. TROUBLESHOOTING 14
XI. APPENDIX
A. INTERCONNECT OPERATION (daisy chain) 15
B. REMOTE MOUNTED TOUCHSCREEN or TABLET 15
C. BUILDING MANAGEMENT SYSTEM (BMS) INTEGRATION (BACnet or Modbus) 15
XII.WARRANTY 16

Thank you for choosing Berner.

Berner International has been saving energy and creating healthy, comfortable environments for our customers for over 60 years. Berner offers unmatched quality, performance, and dependability—not to mention our service. At Berner, we stand behind our products.

Made in USA

READ ALL INSTRUCTIONS BEFORE INSTALLING OR USING AIR CURTAIN

II-270F
October, 2026

©Copyright, 2026 Berner International

WARNING: TO REDUCE THE RISK OF FIRE, ELECTRIC SHOCK OR INJURY TO PERSONS, OBSERVE THE FOLLOWING:

A. Read all instructions before installing or using this air curtain.
B. Use this unit only in the manner intended by the manufacturer and described in this manual. Any other use not recommended by the manufacturer may cause fire, electric shock, or injury to persons. If you have any questions, contact the manufacturer.
C. Before servicing or cleaning unit, switch power off at service panel and lock the service disconnecting means to prevent power from being switched on accidentally. When the service disconnecting means cannot be locked, securely fasten a prominent warning device, such as a tag, to the service panel.
D. Installation work and electrical wiring must be done by qualified person(s) in accordance with all applicable national and local codes having jurisdiction, including fire-rated construction. See page 5, ELECTRICAL CONNECTIONS (NEC Code ANSI/NFPA No. 70).
E. When cutting or drilling into wall or ceiling, do not damage electrical wiring and other hidden utilities.
F. To reduce the risk of fire, do not store or use gasoline or other flammable vapors and liquids in the vicinity of the air curtain.
G. This air curtain is hot when in use. To avoid burns, do not let bare skin touch hot surfaces. Keep combustible materials, such as furniture, pillows, bedding, papers, clothes, etc. and curtains at least 1 inch from the top, back, front, sides and at least 6 feet from the discharge of the air curtain.
H. Extreme caution is necessary when any air curtain is used by or near children or invalids, and whenever the heater is left operating unattended.
I. Do not operate any air curtain after it malfunctions. Disconnect power at the service panel and have the air curtain inspected by a reputable electrician before reusing.
J. To disconnect the air curtain, turn controls to "off", and turn off power to the air curtain circuit at main disconnect panel.
K. Do not insert or allow foreign objects to enter any ventilation or discharge opening as this may cause an electric shock or fire, or damage the air curtain.
L. To prevent a possible fire, do not block the air intake or discharge of the air curtain in any manner.
M. The air curtain has hot and arcing or sparking parts inside. Do not use it in areas where gasoline, paint, or flammable vapors or liquids are used or stored.
N. This heater may include an audible or visual alarm to warn that parts of the heater are getting excessively hot. If the alarm sounds (or illuminates), immediately turn the heater off and inspect for any objects on or adjacent to the heater that may have blocked the airflow or otherwise caused high temperatures to have occurred. DO NOT OPERATE THE HEATER WITH THE ALARM SOUNDING (OR ILLUMINATING).

Model: AC08
Recommended
For mounting
heights up to 8'

Model: AC10
Recommended
For mounting
heights up to 10'

I. UNCRATING

Carefully examine the carton(s) for damage. If the carton is damaged, immediately notify the shipping company. **Do not delay in filing a claim.** If the air curtain(s) were shipped on wooden skids, remove protective wood and banding straps securing the carton(s) to the skid. Open the carton(s) and remove all protective packaging.

Locate the unattached wall mounting bracket. ***See Figure 1.***
For units over 120", there are two unattached wall mounting brackets in the carton.

NOTE: if the unit was ordered with a decorative rear cover, the air curtain will arrive with the cover already installed, and the wall mounting brackets will not be included in the shipment.
Contact Berner, if they are required, for no charge.

Immediately verify that the electrical rating nameplate located on the cover matches the electrical power supply available. Retain the shipping carton(s) until the air curtain(s) are installed and properly operating.

ACCESSORIES: If the air curtain(s) were ordered with optional electrical accessories, the accessories will be found in the carton containing the air curtain packed in a red bag (marked "additional parts inside") or in a separate carton(s) accompanying the air curtain(s).
Check all of the cartons/skids for accessories before discarding.

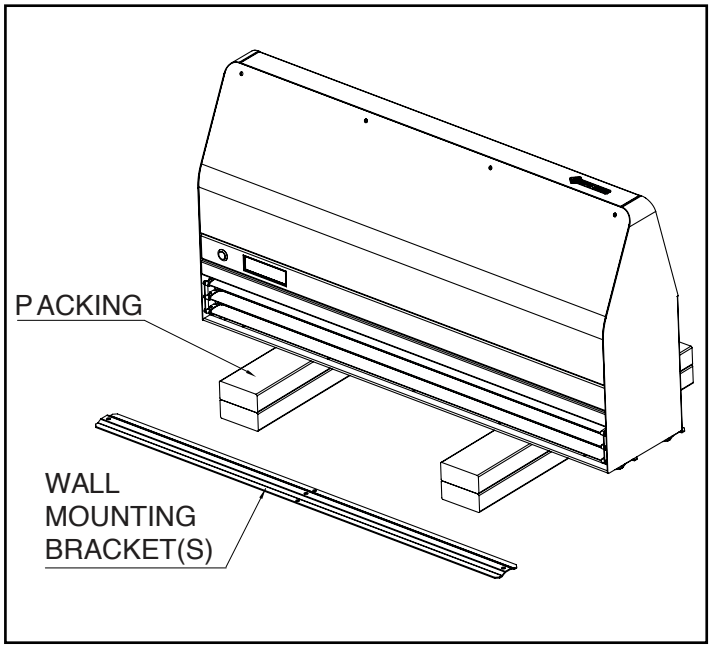

Figure 1 - Uncrating

BERNER AIR CURTAINS

Architectural Contour 8 & 10 Air Curtain
Simple to install
Easy to operate & maintain

1

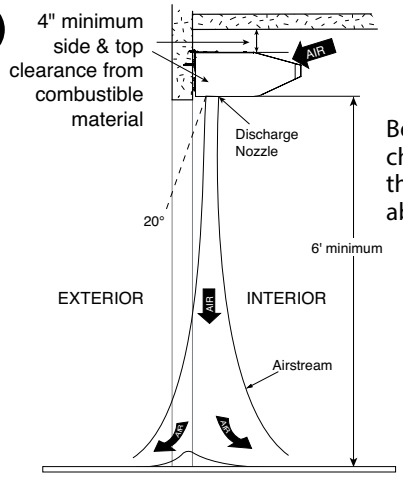

Before hanging, check to see what the clearance is above the door.

For more information see page 4

2

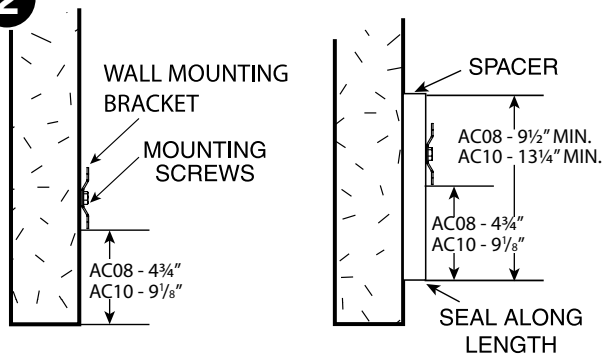

*If the unit must be mounted higher than 1" above the opening, it must be spaced out from the wall 3/8" for every inch the unit is above the door opening.

For more information see page 4

3 **WALL MOUNT**

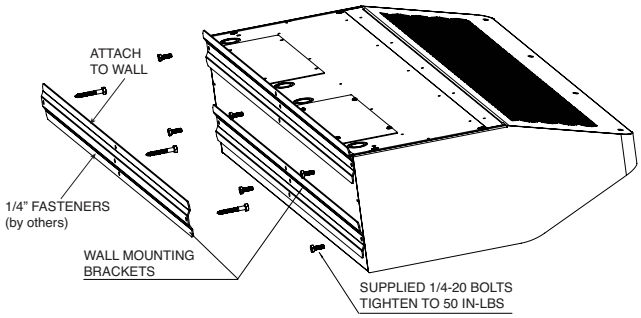

*Longer units use six wall mounting brackets.

For more information see page 5

4 **WALL MOUNT**

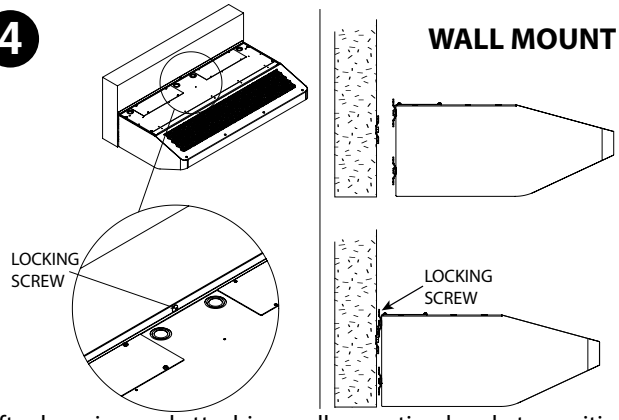

After hanging and attaching wall mounting brackets, position unit against the wall, and slide it down so top wall mounting brackets interlock. Install locking screw.

For more information see page 5

5 **CEILING MOUNT**

Use threaded rod to hang from the ceiling instead of the wall - using the factory installed recessed threaded inserts

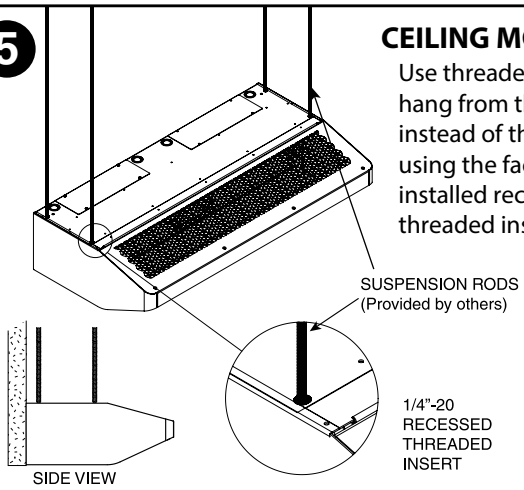

For more information see page 5

6 To access internal components - Remove the screws along the front edge, swing the bottom access panel down.

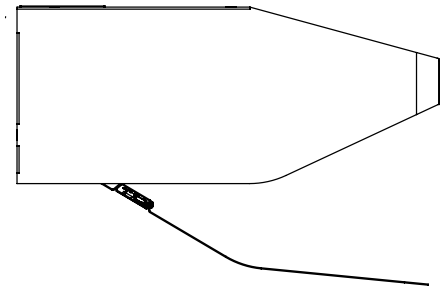

To wire – follow the wiring diagram (attached to the screen in a small bag). The accessories ship in the same box as the air curtain.

For more information see page 6

Berner Air Curtains
111 Progress Ave. / New Castle / PA / 16101 / USA

©Copyright, 2026 Berner Air Curtains

II. MOUNTING INSTRUCTIONS (General)

INDOOR MOUNTING ONLY

To achieve optimum protection, the air curtain should be mounted on the inside of the building, flush to the wall and as close to the top of the door opening as possible. To ensure peak performance, keep the air stream free of obstructions.

The air curtain will not perform properly if negative air pressure exists in the building. Under these conditions, a means for makeup air to the building must be provided so that the air pressure on both sides of the opening is in balance.

Before mounting the air curtain, check the supporting structure to verify that it has sufficient load-carrying capacity to support the weight of the air curtain(s). The mounting hardware (supplied by others) should be capable of supporting a minimum of three (3) times the weight of the air curtain. ***See Table 1.***

IMPORTANT: A minimum of 4" is required above the top rear corner of the air curtain for the installation and removal of the inlet screen, and to ensure proper airflow.

A. When determining the mounting location for the air curtain(s), make sure that nothing interferes with the curtain of air developed when the discharge vanes are directed from 0° to 20° toward the door opening. If the air stream strikes any obstruction (the top edge of the doorway, a door opening device, etc.), the effectiveness of the air curtain will be greatly reduced. ***See Figure 2.***

B. For optimum performance, the bottom of the air curtain (discharge nozzle) should be no more than 1" above the top of the door opening with the air curtain(s) mounted flush to the wall. If the air curtain must be mounted higher, it must be spaced out from the wall 3/8" for every inch the air curtain is above the door opening. ***See Figure 3.*** For optimum protection, any void between the air curtain and the wall should be sealed along the full length of the air curtain.

C. Do not block (obstruct) the air intake screen. Insufficient airflow can cause the unit to overheat.

D. **The air curtain(s) shall:**
   1. Have a minimum clearance of at least 4" from the sides and 4" from the top.
   2. Have a minimum clearance of at least 6' between the bottom of the air curtain and the floor.
   3. Be installed Indoors Only.

E. Proceed to either **Section III - WALL MOUNTING or Section IV - SUSPENDED MOUNTING**

III. WALL MOUNTING

A. **PREPARATION**
   1. Locate the wall mounting brackets. Two of the wall mounting brackets are shipped already attached to the back of the air curtain, and the third is shipped loose and can be found in the carton that contained the air curtain. ***See Figure 4.***

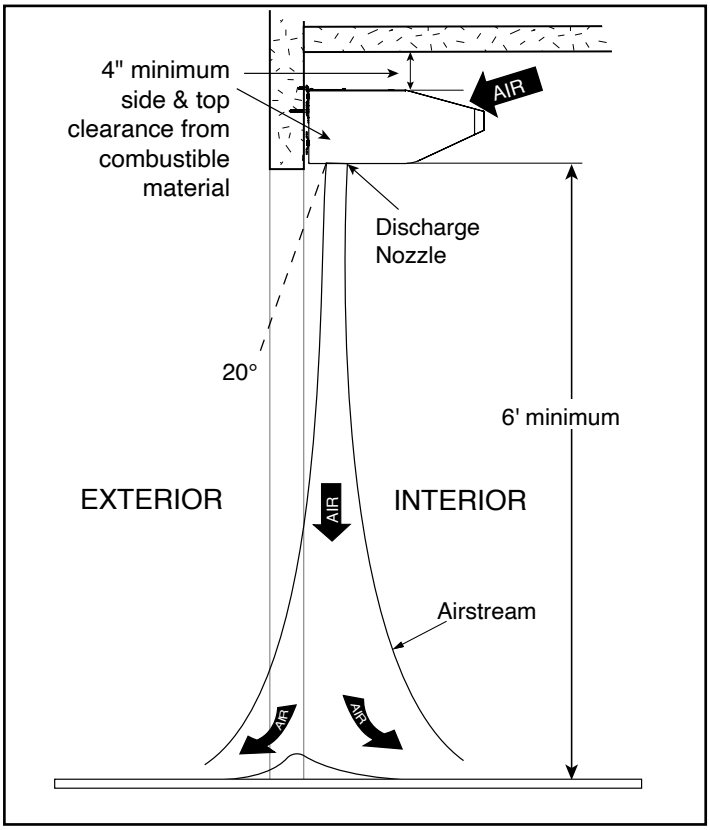

Figure 2 - General Mounting

MODEL	Net Weight (lbs.)		
	AC10 Ambient	AC10 Electric	AC10 Hot Water
AC10-F-1036A	82	88	107
AC10-F-1042A	91	97	119
AC10-F-1048A	107	113	138
AC10-F-1060A	116	122	153
AC10-F-2072A	164	176	210
AC10-F-2078A	164	176	213
AC10-F-2084A	182	194	234
AC10-F-2096A	214	226	272
AC10-F-2108A	223	235	287
AC10-F-2120A	232	244	300
AC10-F-3132A	296	314	375
AC10-F-3144A	321	339	406

MODEL	Net Weight (lbs.)		
	AC08 Ambient	AC08 Electric	AC08 Hot Water
AC08-F-1036	43	48	63
AC08-F-1042	48	53	71
AC08-F-1048	53	58	78
AC08-F-1060	64	69	94
AC08-F-1072	74	84	112
AC08-F-2078	86	84	114
AC08-F-2084	96	106	139
AC08-F-2096	106	116	154
AC08-F-2108	117	127	170
AC08-F-2120	128	138	185

TABLE 1 - Weight Chart

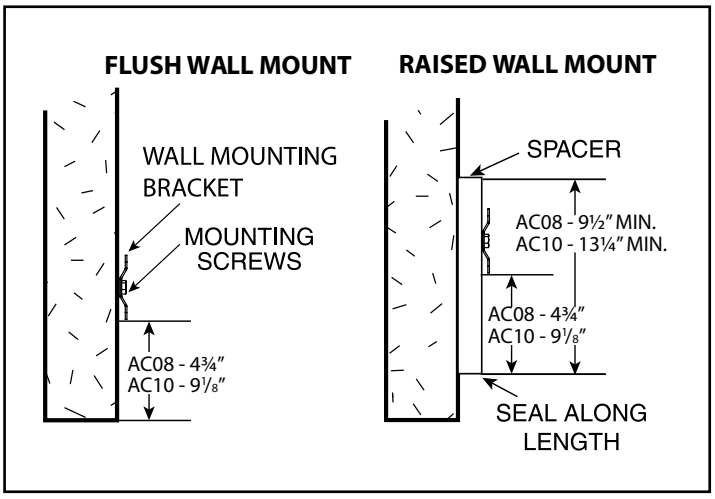

Figure 3 - Wall Mounting Location

For units over 120", there are six wall mounting brackets (four are pre-attached to the air curtain, and two are loose in the carton). NOTE: The wall mounting brackets are identical.

2. The mounting hardware (supplied by others) must be capable of supporting a minimum of three times the net weight of the Air Curtain. ***See Table 1.***

B. **MOUNTING WALL BRACKETS**

1. Position one wall mounting bracket over the door opening as shown in ***Figure 3.*** The bracket should be centered over the door opening. NOTE: For units longer than 120", install two wall mounting brackets in tandem across the door opening.
2. Using minimum ¼" fasteners (supplied by others), secure the wall mounting bracket to the supporting structure. **NOTE**: It is acceptable to drill holes through the bracket mounted to the wall to allow fasteners to hit a wall stud. Fasteners must be placed within 8" of the ends of the air curtain cabinet.

C. **ATTACHING THE AIR CURTAIN TO THE WALL MOUNTING BRACKETS**

1. Raise the unit over the door (air discharge nozzle facing down) and onto the wall mounted brackets. ***See Figure 5.***
2. Position the unit against the wall, slide it down so the top wall mounting bracket (attached to the unit) interlocks with the wall mounting bracket that is attached to the wall. Add one locking screw in the top middle of the wall mounting bracket. ***See Figure 5.***
3. Proceed to **Section V - ELECTRICAL CONNECTIONS**

IV. SUSPENDED MOUNTING

NOTE: if the unit was ordered with a decorative rear cover, the air curtain will arrive with the cover already installed, and the wall mounting brackets will not be included in the shipment. Contact Berner if they are required.

A. For top mounting using suspension rods, four (4) factory installed 1/4"-20 threaded inserts are located on the top of the unit. ***See Figure 6.***

B. Install 1/4"-20 threaded rods, or other suitable hardware at a location sufficient to support the Air Curtain. The mounting hardware (supplied by others) must be capable of supporting a minimum of three times the net weight of the Air Curtain. ***See Weight Chart, Table 1.***

C. Attach 1/4"-20 threaded rods, or other suitable hardware to the top mounted threaded inserts. Secure threaded rods with locking nuts.

D. Proceed to **Section V – ELECTRICAL CONNECTIONS**

V. ELECTRICAL CONNECTIONS

All electrical wiring and connections **MUST** be performed by qualified personnel in accordance with the latest edition of the National Electrical Code ANSI/NFPA No. 70 or, in Canada, the Canadian Electrical Code, Part 1-C.S.A. Standard C22.1 and local codes and regulations.

MAKE SURE THE CORRECT VOLTAGE AS MARKED ON THE UNIT IS USED.

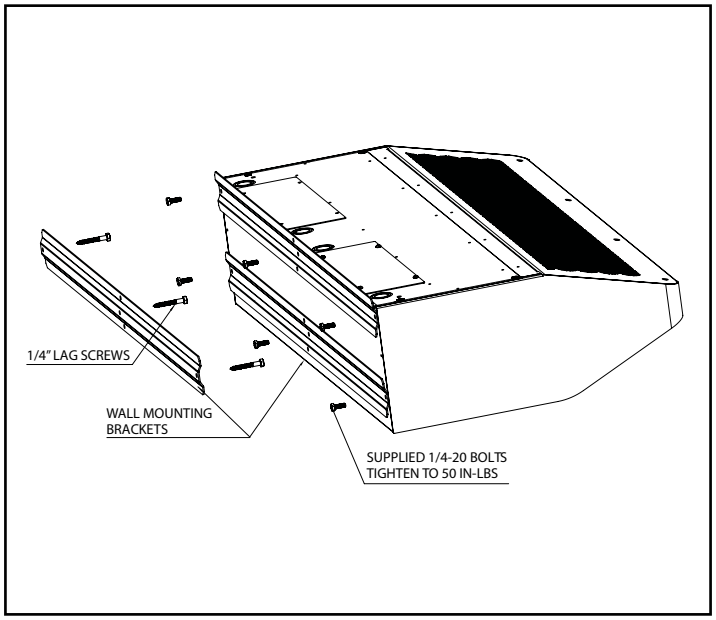

Figure 4 - Wall Mounting Preparation

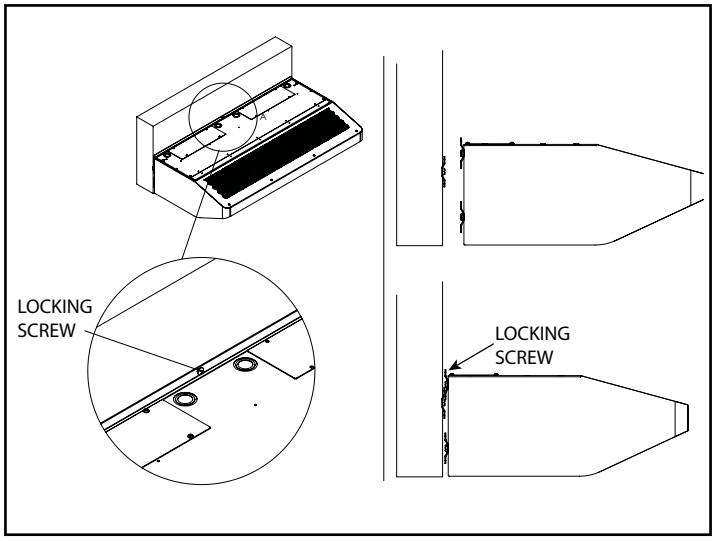

Figure 5 - Wall Mounting Installation

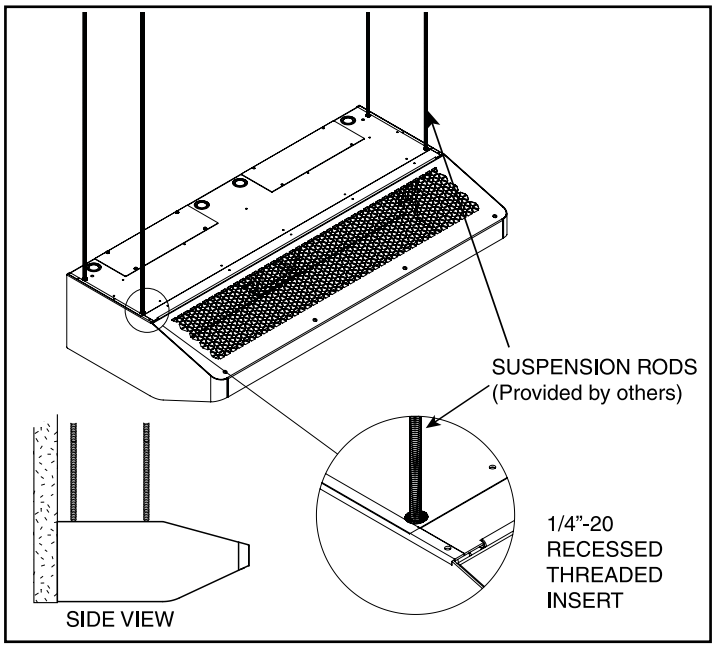

Figure 6 - Suspended Mounting

A. A separate line voltage supply with a suitable branch circuit protection device should be run directly from the main electrical panel to the unit. A disconnect switch for each branch circuit is a required part of this installation. See the voltage label on the unit for circuiting and total electrical load. The wiring diagram is located in the wiring compartment, located on the top of the unit. ***See Figure 7.***

B. All field wiring must be copper with a minimum insulation of 60°C within approved conduit. If any of the wire supplied in the unit must be replaced, it must be replaced with copper wire with a minimum insulation of 90°C.

C. Electric, steam and hot water heated air curtains are factory equipped with an unit mounted solid state temperature sensor located internally to measure the incoming (return) air stream.

D. Remove the wiring compartment cover.

E. Connect all supply and control circuit wires according to the wiring diagram provided.
NOTE: For Electric and Hot Water heated air curtains provided with an optional remote thermostat, mount and wire the thermostat according to thermostat instructions and wiring diagram.

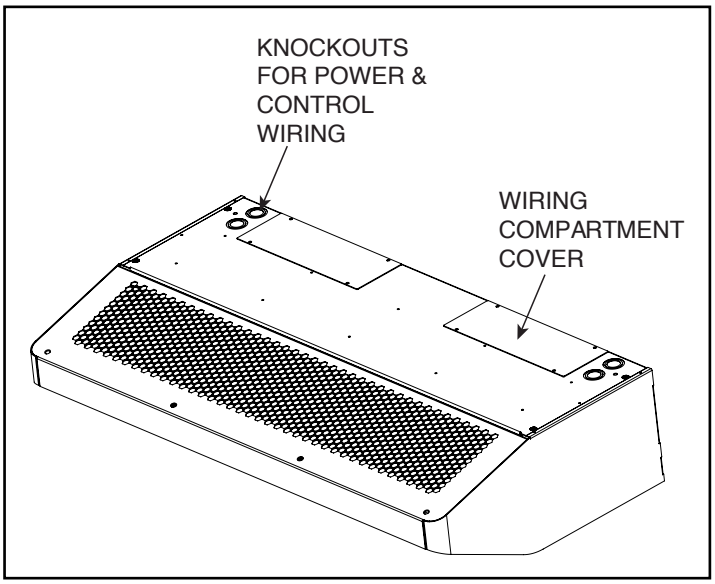

Figure 7 - Electrical Connections

For Programming multiple air curtains from a single source, there are two options:

1. **Interconnect Connection (aka daisy chain) via physical connection,** see **Appendix A.**
   NOTE: The air curtain must have been ordered from the factory with the Interconnect physical data link option.
2. **Grouping via the Berner AIR app, see Section VII - Operating Instructions.**
   NOTE: All Architectural Contour air curtains include the Berner AIR smart control & app.

For Remote Mounted Intelliswitch™ Touchscreen Display or Touchscreen Tablet (ordered separately), see **Appendix B.**
NOTE: The air curtain must have been ordered from the factory with Remote Mounted Intelliswitch™ Touchscreen Display or with the factory installed PoE for connection to a touchscreen tablet.

For BACnet or Modbus Integration, see Appendix C.

For Electric and Hot Water air curtains, see Section VI - Field Connections, otherwise proceed to Section VII - Operating Instructions

VI. FIELD CONNECTIONS

A. ELECTRICALLY HEATED MODELS

The heater circuit may be controlled by an optional remote thermostat or through the built-in Intelliswitch™ temperature probe located on top of the air curtain. Overheating protection is provided by auto reset thermal cutouts built into the heater coil assembly (see the wiring diagram attached to the screen in a small bag). ***See Figure 7.***

B. HOT WATER HEATED MODELS

An optional water coil solenoid valve (by others or Berner) may be controlled through the Intelliswitch™ or independently. The Intelliswitch™ is capable of providing the same voltage used for the motor to power a solenoid load up to 5 amps. This call for heat may be controlled by an optional remote thermostat or through the built-in Intelliswitch™ temperature probe located on top of the air curtain. Piping should be done in accordance with local codes, regulations and standard practices. Connect the building system to the (3/4"-AC08 or 1"- AC10) MPT supply and return header connections. ***See Figure 8.***

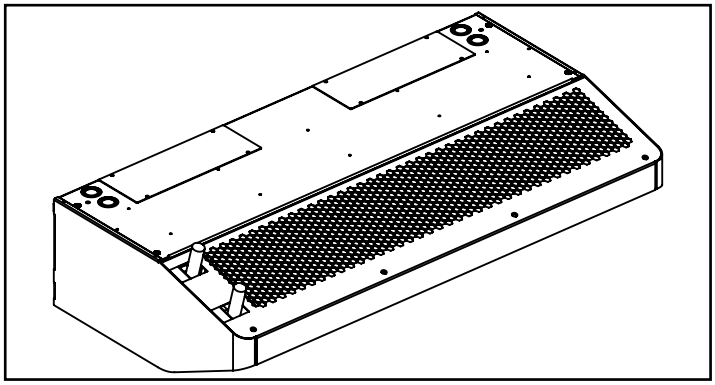

Figure 8 - Hot Water Connections

VII. OPERATING INSTRUCTIONS

This air curtain comes with a built-in **Intelliswitch™** digital controller with touchscreen display and the **Berner AIR® BASIC** smart control and app to control and schedule fan activation, fan speed selection, heat activation, and more. **The Berner AIR® BASIC** also includes features such as grouping, and adaptive settings. The air curtain must be properly installed before it can be used.

A. GENERAL OPERATION

1. To operate using the **built-in touchscreen display,** located on the bottom of the air curtain, follow the guided prompts on the touchscreen. For more information, proceed to the ***Quick Start Operation Guide, page 12.***
2. To operate using the **Berner AIR® App,** download the app and follow the prompts. After setting up an account, continue to follow the prompts to add the air curtain to the app. The app allows air curtain(s) to be programmed & operated via smart phone, and requires an on-site, secure internet connection. Berner recommends having the on-site user(s) set-up the Berner AIR app on his/her smart phone.
   a. **Grouping**: To group more than one air curtain together, all air curtains to be grouped must be connected to the Internet and have been added to the operator's Berner AIR app account. Then within the app, select "Group", and follow the prompts.
3. Unheated units will have the fans activated by a door switch or sensor. The fan speed can be selected via the app or the Intelliswitch™ touchscreen display.
4. Heated units will have fans activated by a door switch or sensor, but may also be activated by the thermostat in Comfort + Mode. The fan speed can be selected via the Berner AIR app or the Intelliswitch display.

For Building Management System (BMS) Integration via BACnet or Modbus integration capabilities (ordered separately), **see Appendix C.**

Connect with
BERNER AIR
- SET UP
- CONTROL
- TROUBLESHOOT

BERNER.COM

USING THE BERNER AIR® APP TO OPERATE THE AIR CURTAIN

Before you begin:

- Download the Berner AIR® app, and set up your account.
- Make sure that the air curtain you're connecting to is nearby, powered on, and within Bluetooth and Wi-Fi range.
- Check that you have Wi-Fi and Bluetooth turned on.

How to add (pair) an air curtain to the Berner AIR®:

- Make sure the air curtain is close to your smart device.
- On the app home screen, click the giant plus sign, located in the upper right.
- The air curtain(s) will appear in the app and be identified by the Unit ID, which can be found across the top of the Intelliswitch home screen. Tap the air curtain with the Unit ID that you wish to pair.
- As a security precaution, on-site confirmation is then required. Go to the Intelliswitch display, and select "Yes" to pair.
- Once the air curtain is paired, follow the prompts on the app to set up the air curtain.

NOTE: The air curtain can be paired and operated via the app, using Bluetooth only, if the air curtain is within Bluetooth range of the smart device. To control from further distances, the air curtain must be connected to the internet.

B. AIR STREAM ADJUSTMENT

1. With the air curtain operating and the door in its full open position, check to see that nothing is obstructing the airflow at the discharge nozzle vanes.
2. Find the air stream split location. Hold a handkerchief by its corners, approximately 12" above the floor. Gently move the handkerchief back and forth in the doorway. Make sure the air is being directed to both the inside and the outside. ***See Figure 9.*** The split location is indicated where the handkerchief is vertical with minimal or no fluttering.
3. The split location should be approximately 3" outside the doorway. If necessary adjust the discharge nozzle vanes by de-energizing the unit and firmly pushing/ pulling on the vane tip until properly located.

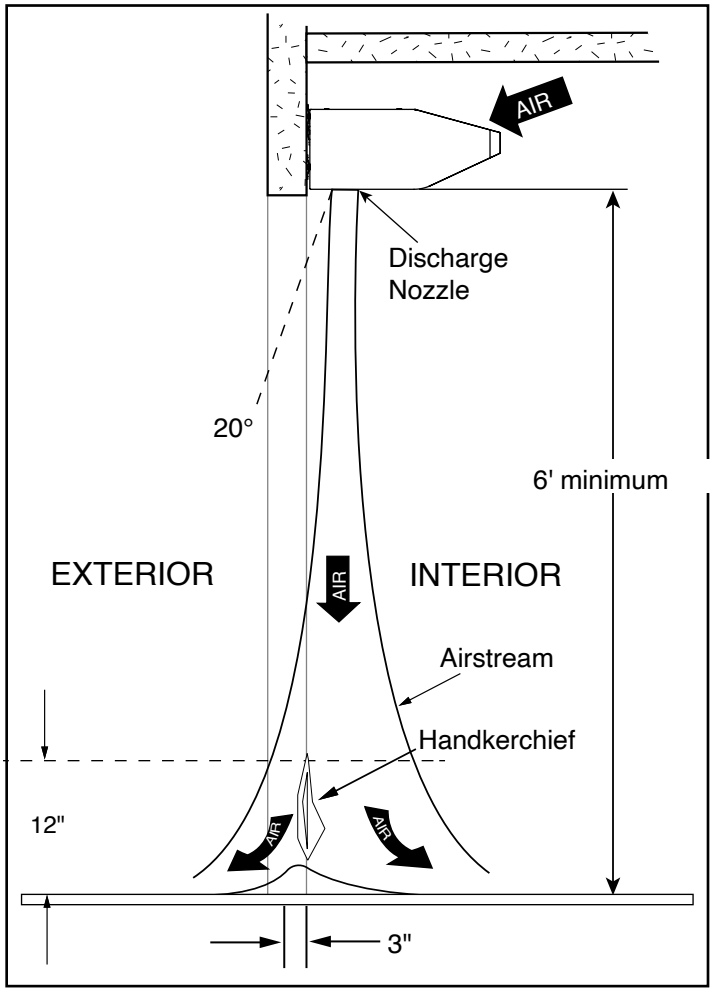

Figure 9 - Air Stream Adjustment

VIII. MAINTENANCE & CLEANING

CAUTION: ELECTRIC SHOCK HAZARD
Disconnect power whenever servicing unit. More than one disconnect may be required to de-energize unit.

1. Stainless steel appliance wipes are recommended for wiping down the cabinet.
2. Keep your air curtain operating at peak efficiency by cleaning the blower wheels, motor(s) and intake screen. Buildup of dust on the blower wheels can cause vibration, noise and excessive wear on the motor bearings. The frequency of cleaning will depend on the environment where the unit is operating.
   a. Dirty, dusty or greasy environments could require a cleaning schedule of once every month.
   b. If the environment is not that dirty, the air curtains(s) should be scheduled for cleaning a minimum of once every six months.
   c. The air inlet filter typically requires cleaning every three to six months, more if the environment calls for it.
   d. All motors have permanently lubricated, sealed, sleeve bearings and require no maintenance.
3. Software Updates: to download the latest version of the Intelliswitch firmware, press the emergency stop / reset button to the left of the touchscreen and hold it down for ten seconds. On the remote mounted Intelliswitch touchscreen display, the button is found along the bottom edge of the display.
   NOTE: the air curtain must be connected to the Internet to enable the download.

A. PERFORMING PREVENTIVE MAINTENANCE

1. **Disconnect the power to the unit.**
2. **Filter** - the aluminum washable filter is held in by the inlet screen. Access the filter by removing the Phillips head flush mount screws across the top front of the unit. Rotate the inlet screen forward slightly to allow its tabs to be removed from the bottom front cover. Vacuum and/or wash with dish soap and water.
3. **Internal** - open the bottom access panel by removing the inlet screen as described above, and then removing the now exposed fasteners across the front of the bottom panel, and the two screws along the bottom left and right side. The panel is hinged, so carefully allow it to swing down. Vacuum and scrape (if necessary) to remove the build-up of dirt and debris. The motor(s) are permanently lubricated and require no additional lubrication.
4. Re-install the bottom access panel and intake screen. ***See Figure 10.***
5. Reconnect the power on after cleaning.

CAUTION: STAND CLEAR OF THE UNIT OR WEAR SAFETY GOGGLES AS LOOSE DEBRIS MAY BE PRESENT AND MAY EXIT THE NOZZLE UPON START UP!

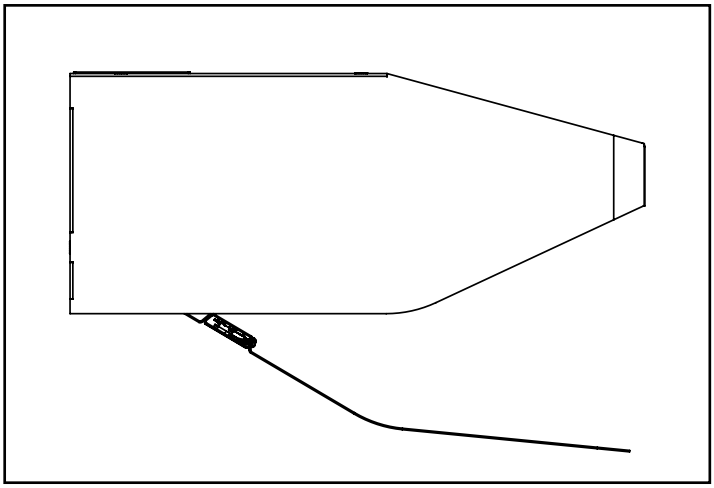

Figure 10 - Bottom Access Panel

IX. SERVICE

CAUTION: ELECTRIC SHOCK HAZARD Disconnect power whenever servicing unit. More than one disconnect may be required to de-energize unit.

*Any service performed on the Architectural Contour Series air curtain **MUST** be done by qualified personnel.* Berner air curtains require very little servicing. All parts are easily accessible for periodic inspection and maintenance.

A. REPLACING FANS AND/OR MOTORS

CAUTION: ELECTRIC SHOCK HAZARD Disconnect power whenever servicing unit. More than one disconnect may be required to de-energize unit.

AC08: To replace fans and/or motors. ***See Figure 11***

1. Lock out power from the unit.
2. Swing down the bottom access cover (BAC) by removing the flush screws across the front bottom of the unit
3. Disconnect the motor wiring harness.
4. Using a 1/8" hex driver, loosen the set screws (one on each fan) that secure the fan hubs to the motor shafts.
5. Loosen, but do not remove the screw on each fan bearing retainer and rotate up to fully expose the fan bearing.
6. Slide each fan in towards the motor as far as possible.
7. While supporting the motor with one hand, remove the screws at the top of the motor mount. This will free the motor/fan assembly.
8. Lower the motor/fan assembly out of the unit. Ensure the rubber bearing cushions come out with the fan bearings.
9. Replace in reverse order. **NOTE:** that when reinserting the fan bearings, ensure the rubber bearing cushion is properly seated. Improper seating can result in fan failure.

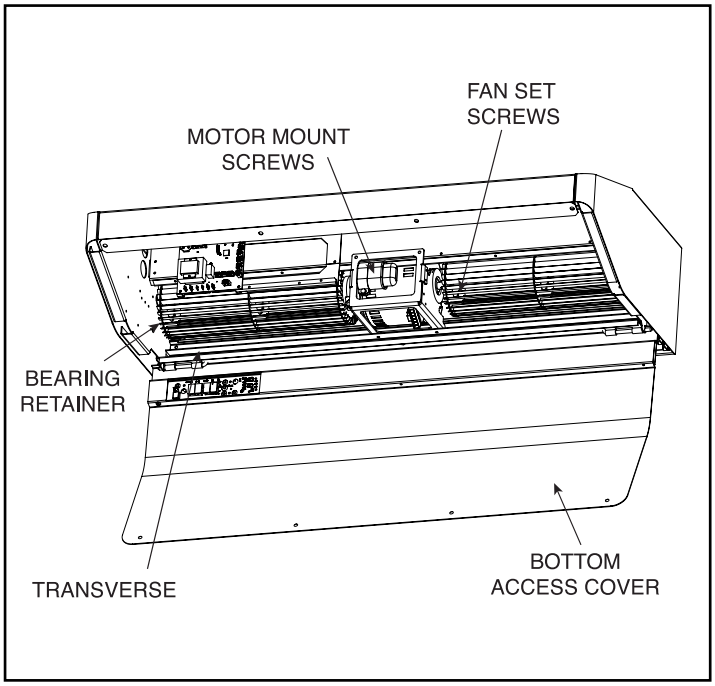

Figure 11 - Architectural Contour 8 (AC08)- Replacing Fans /Motors

AC10: To replace fans and/or motors. ***See Figure 12***

1. Lock out power from the unit.
2. Swing down the bottom access cover (BAC) by removing the flush screws across the front bottom of the unit.
3. Disconnect the motor wiring harness.
4. If the module has electric heaters, mark the electrical connections and disconnect them. Remove the heaters by unscrewing their mounting brackets from the fan housings. When reinstalling the heaters, take care to not over torque these fasteners.
5. Support the blower module by holding the motor. Removing the (2) #12 hex head screws that secure the blower module to the top channel with a 5/16" socket. This operation may be easier with two people; one to support the blower module and one to remove the screws.
6. Replace with "Lower the blower module out of the unit.
7. Using a 5/32" hex driver, loosen the set screws (one on each fan) that secure the fan hubs to the motor shafts.
8. Remove the screws on the back of the blower plate that secure the fan housings to the blower plate.
9. Slide the fan impellers and housings off of the motor shaft.
10. Detach the motor ground wire from the motor mount.
11. Remove the clips that hold the motor to the motor mount.
12. Replace in reverse order.

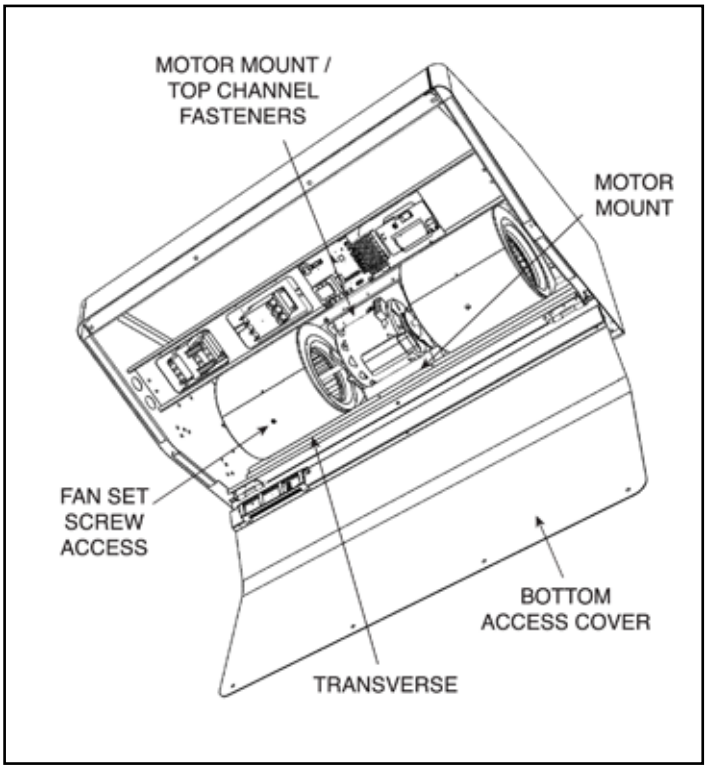

Figure 12 - Architectural Contour 10 (AC10) - Replacing Fans /Motors

QUICK START INSTRUCTIONS

For your Berner Air Curtain with Intelliswitch™

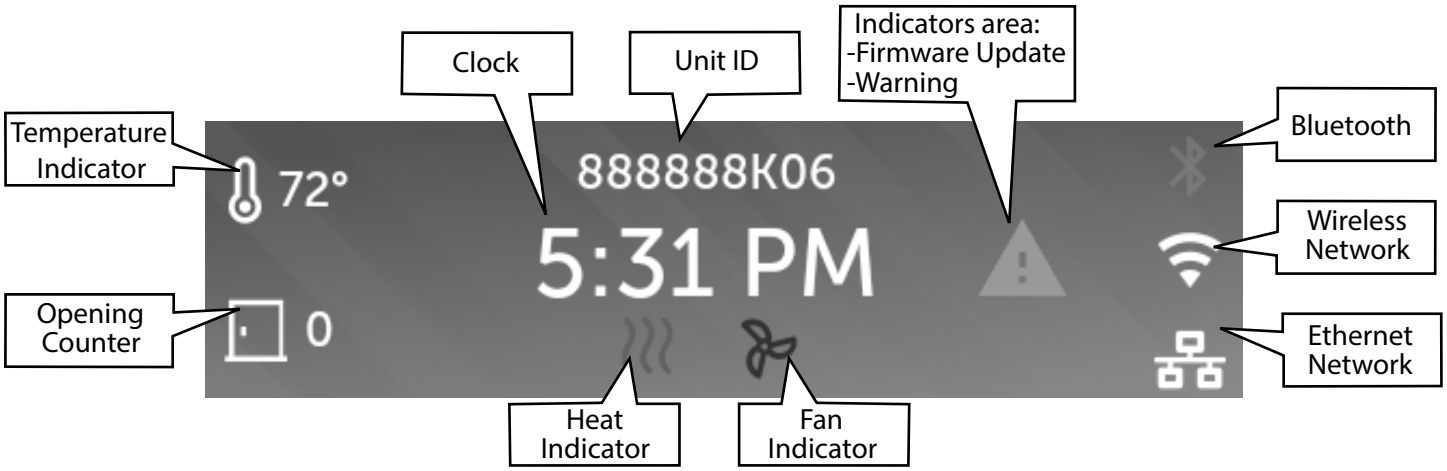

HOME SCREEN

To reach the "HOME" Screen, touch the screen with your finger.

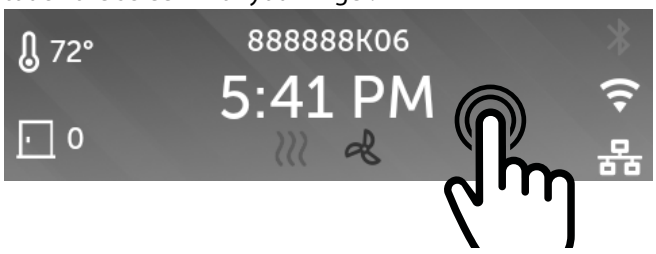

To access to the different panels, touch the related icon. Each panel can control a specific parameter of the air curtain.

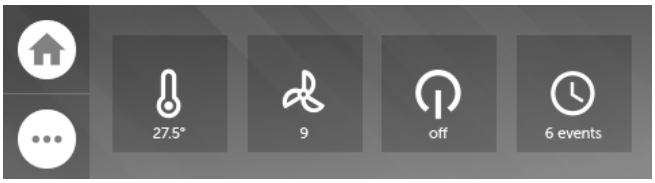

Button to return to the "HOME" screen.

Button to access the advanced parameters.

Button to access the temperature settings.
(This button is only available if your unit is heated.)

Button to access the fan speed settings.

Button to access the mode settings.

Button to access the Schedule.
(See Events Configuration)

Button to return to the previous panel.

FAN SPEED SETTINGS

You can adjust your settings by press the "+" or the "-" icons.

TEMPERATURE SETTING

You can adjust your settings by press the "+" or the "-" icons.

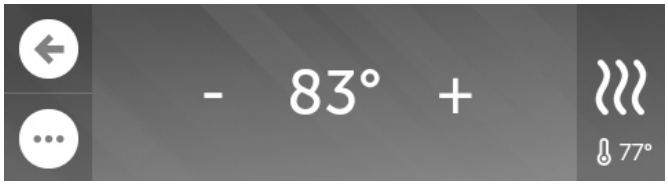

NOTE: The temperature value at the right corner indicates the ambient temperature around the air curtain sensor.

MODE SETTINGS

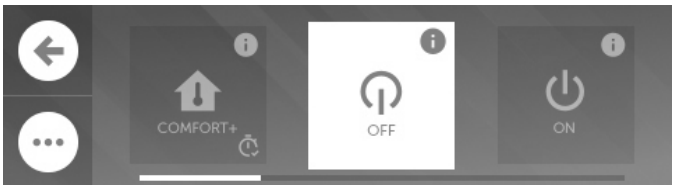

Different modes are available:

COMFORT +
The air curtain and heater turn on when the door opens or the room temperature drops below the set temperature. The air curtain turns off when the door is closed, the time delay has expired, and the room temperature is above the set temperature.

AUTO
The air curtain turns on when the door opens and turns off when both the door closes and the time delay expires.

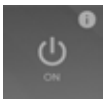

ON
The air curtain turns on when scheduled events are satisfied. If no events have been scheduled, the air curtain turns on.

OFF
The air curtain is off.

EVENTS CONFIGURATION

The *Intelliswitch*™ is able to configure a schedule to automatically activate your air curtain. To do this, you need to activate the option, by executing the followings instructions:

1. On the "HOME" screen, push the button.
2. Select the button.
3. To reach the "SCHEDULE" option, by pushing the options on the top on each side of the screen.
4. To activate the schedule, just press the icon.
5. Return to the "HOME" screen by using the button.
6. On the "HOME" screen, press the tile.
7. For your first event, press the following tile.

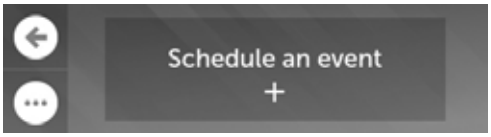

8. On the schedule panel, select the desired parameters among the following's options:

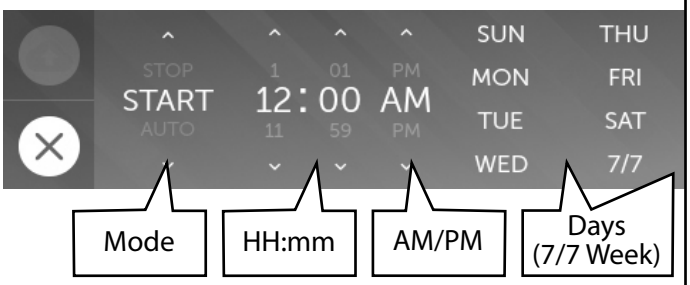

NOTE: You can use the button to cancel your action.

9. Use the button to save your settings.
10. After the settings of your first event, it appears as shown:

NOTE: You can deactivate an event by using the slider at the bottom right of the desired event. Alternatively, if you want to suppress the event, push the button.

11. Press the tile to add another event.

NOTE: The schedule is fully operational with at least, 2 events.

CLOCK CONFIGURATION

If *the Intelliswitch*™ *is connected to internet, the date and time will be automatically synchronized. Otherwise you can manually configure them, by following the instructions below:*

1. On the "HOME" screen, push the button.
2. Select the "clock parameters" button.
3. Select the "Time" button.

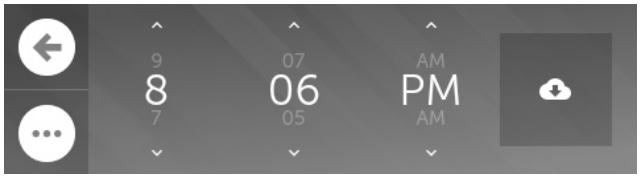

4. Set the time by using the arrows on the screen then push the button to save.
5. To change the date, repeat the same operations but on steps 3, select the button .

NOTE: Changing the date or time manually, will disable the automatic time synchronization if your unit is connected to internet.
NOTE: The time zone affects the automatic synchronization, be sure your time zone is correctly selected (See Time Zone Configuration)

TIME ZONE CONFIGURATION

To change your timezone, follow these instructions:

1. On the "Home" screen, push the button.
2. Select the button.
3. Select the "clock parameters" button.
4. Select the "TimeZone" button.
5. Select successively the options "Continent"⟶ "Country" "City".⟶
6. Once you finish your selection, press the button to save the time zone.

NOTE: If the date and time is automatically synchronized with the internet, it's mandatory to set the timezone correctly. If not connected, the appropriate timezone setting will help following the daylight-saving time (DST) changes.

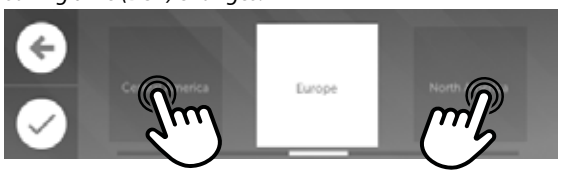

Press the adjacent tiles on other sides to navigate through the menu.

X. TROUBLESHOOTING

SYMPTOMS	CAUSE	REMEDY
NO AIR	• Power supply line open (no power)	• Check power source, check service disconnect, check method of control in ON position
	• Fuse blown/circuit breaker tripped	• Replace fuse(s)/reset breaker
	• Motor overload tripped	• Internally protected motor - should reset automatically after cool-down, if not, replace motor.
	• Failed switch	• Replace switch
	MOTOR RUNNING/FANS ARE NOT ROTATING	
	• Broken or damaged flexible hub	• Replace fan sleeve/reengage coupling
	• Shaft rotating inside fan	• Tighten set screws/tighten fan on shaft
	ELECTRICAL CONTROLS NOT FUNCTIONING WHEN DOOR IS OPEN	
	• Selector switch is in off position	• Turn switch to “ON” position
	• Door limit switch not operating	• Repair or replace limit switch
MINIMUM AIR	• Air directional discharge vanes mis-adjusted	• Adjust vanes to proper position, see instructions
	• Inadequate intake clearance	• Move air curtain or remove obstruction Provide adequate space for air curtain
	• Blower motor operates below speed	• Improper voltage
	• Fan rubbing against housing	• Free fan from housing
	• Fan wheels clogged with dirt	• Clean and vacuum fan wheels
	• Fan in backwards	• Check fans for blade curve toward discharge
AIR IS NOT HITTING FLOOR	• Air stream too weak	• Adjust nozzle to proper position, adjust motor speed; see installation instructions
	• Air stream hits obstruction	• Remove obstruction or reposition air curtain (move out 3/8” for every 1” up from the door)
	• Negative pressure	• Relieve negative pressure by providing makeup air
UNEVEN AIR	• Shaft rotating inside fan	• Tighten set screws
	• One motor not operating	• Repair or replace motor
EXCESSIVE AIR MOVEMENT AT DOORWAY	• Nozzle not angled out far enough	• Adjust nozzle angle to outside
	• Unit too powerful	• Adjust motor speed
	• Air movement too cold	• Add auxiliary heat to overcome wind chill factor
	• Pushing air outside building	• Adjust discharge angle back into building, adjust motor speed
	SEE AIR IS NOT HITTING FLOOR SYMPTOMS	
ELECTRICALLY HEATED MODELS		
NO HEAT	• Switch turned to “ON” position	• Replace switch or check wiring
	• Thermostat not set properly	• Change thermostat setting
	• Coils burned out due to lack of air	• Correct airflow problem; replace coils
	• Automatic reset thermal cutout failed in open position	• Replace automatic thermal cutout
	• Manual reset thermal cutout tripped (if supplied)	• Reset manual thermal cutout
MINIMAL HEAT	• Thermostat in wrong location - thermostat too close to discharge	• Move thermostat away from air stream
	• Improper voltage	• Supply proper voltage
	• Thermostat not set properly	• Change temperature setting
	• Low entering air temperature	• Based on unit temperature rise, reduce speed
EXCESSIVE HEAT	• Incorrect speed range	• Check factory menu speed range matches diagram
	• Thermostat in wrong location	• Move the thermostat closer to air stream
	• Thermostat not set properly	• Change temperature setting
	• Insufficient air over coil	• Remove restriction on intake
	• Improper voltage	• Supply proper voltage
HOT WATER HEATED UNITS		
EXCESSIVE HEAT	• Too high hot water pressure	• Reduce hot water flow
	• Inadequate air flow, fins plugged up, dirty coils	• Clean intake and coils
MINIMAL HEAT	• Water temperature too low	• Increase water flow
	• Intake air below design temperature	• Increase water flow

XI. APPENDIX

A. Interconnect Connection (a.k.a. daisy chain) via physical connection

Used for programming multiple air curtains from a single Intelliswitch™ digital controller.

NOTE: The air curtain must have been ordered from the factory with the Interconnect physical data link option.

A wired ethernet connection (provided by others) must be made between all air curtains to be linked. Once air curtains are linked, all menu settings made through any air curtain Intelliswitch display or remote Intelliswitch display will transfer to all other linked air curtains. Parameter changes made on any linked air curtain will update all other Intelliswitch boards "live" upon menu selections.

NOTE: Low voltage ethernet cable (provided by others), maximum length, 300'.

B. Remote Mounted Touchscreen Display or Tablet

1. Touchscreen Display: If the unit was ordered with a remote mounted Intelliswitch touchscreen display, the air curtain will come pre-wired with a USB-C connection in the wiring compartment and 20' of USB-C Cable to link and power the device.

2. Tablet: If the unit was ordered with a remote mounted tablet, the air curtain will come pre-wired with a power-over-ethernet (PoE) connection in the wiring compartment to power the devices. Connect a CAT 5 ethernet cable for low voltage power with a maximum length of 300' (provided by others).

C. Building Management System (BMS) Integration (BACnet or Modbus)

This unit is equipped with the Berner AIR™ BMS smart control & app, and is BACnet and Modbus compatible.

1. To connect wirelessly to the Building Management System using **BACnet-IP, BACnet-MS/TP, Modbus-TCP, or Modbus-RTU** client, download the Berner AIR App, pair the air curtain to the app and then in the settings menu select the BACnet or Modbus option. Follow the prompts to configure.

2. To connect via wire: this air curtain includes an ethernet connection port in the wiring compartment to connect to the Building Management System (BMS) via BACnet-IP or Modbus protocols. Connect using a CAT 5 ethernet cable (provided by others).

   Once wired, either:
   a. Download the Berner AIR™ App, pair the air curtain to the app and then in the settings menu select the BACnet or Modbus option. Follow the prompts to configure. Once configured to the BMS, the app can be disconnected.
   b. Tap the Intelliswitch touchscreen on the air curtain, and then tap on to access the advanced parameters.

XII. WARRANTY

Berner International ("The Company") warrants all new equipment to be free of defects in workmanship and material for a period of five years (5 years) on unheated models and two years (2 years) on heated models from the original date of shipment, provided the equipment has been properly cared for, installed and operated in accordance with the limits specified on the nameplate and The Company's instructions. All warranted parts will be replaced at no charge for a period of six months from date the parts were shipped.

The Company will correct by repair or replacement, at its option and expense, any proven defects in said apparatus, subject to the above conditions, provided that immediate written notice of such defects is given to The Company. The warranty does not include any labor incurred for the removal or installation of defective part(s). The Company reserves the right to inspect, or have inspected by a qualified representative, any apparatus at the place of installation before authorizing repair or replacement. Repair or replacement will be made F.O.B. factory with any applicable transportation charges to be borne by the customer. Merchandise not of The Company's manufacture supplied in piece, or in component assemblies, is not covered by the above warranty, but The Company will give the customer the benefit of any adjustment as made with the Manufacturer.

This warranty is void if the apparatus has been tampered with in any way or shows evidence of misuse.

The Company will not assume any expense or liability for repairs made outside its factory without proper written consent from its service manager, nor for any transportation charges on apparatus returned to the factory without written authorization by The Company.

Nothing in the above warranty provisions, however, shall impose any liability or obligation of any type, nature or description upon Berner International if Berner has not received payment in full for the apparatus in question.

THERE ARE NO WARRANTIES WHICH EXTEND BEYOND THE DESCRIPTION ON THE FACE HEREOF INCLUDING THE IMPLIED WARRANTY OF MERCHANTABILITY AND FITNESS FOR A PARTICULAR PURPOSE.

LIMITATION OF DAMAGES

Notwithstanding anything to the contrary above, customer's exclusive remedy for any and all losses or damages resulting from the sale of The Company's equipment under this agreement, including but not limited to, any allegations of breach of warranty, breach of contract, negligence or strict liability, shall be limited, at The Company's option, to either the return of the purchase price or the replacement of the particular equipment for which a claim is made and proved. In no event shall The Company be liable for any special, consequential, incidental or indirect losses or damages from the sale of The Company's equipment under this agreement.

SERIAL NUMBER	DATE PURCHASED

BERNER
AIR CURTAINS

Saving energy and creating healthy, comfortable environments

BERNER AIR CURTAINS
New Castle, Pennsylvania

724-658-3551 • 1-800-245-4455 • Berner.com

Berner reserves the right to alter specifications without prior notice.

© Copyright 2026 Berner International

MADE IN U.S.A.